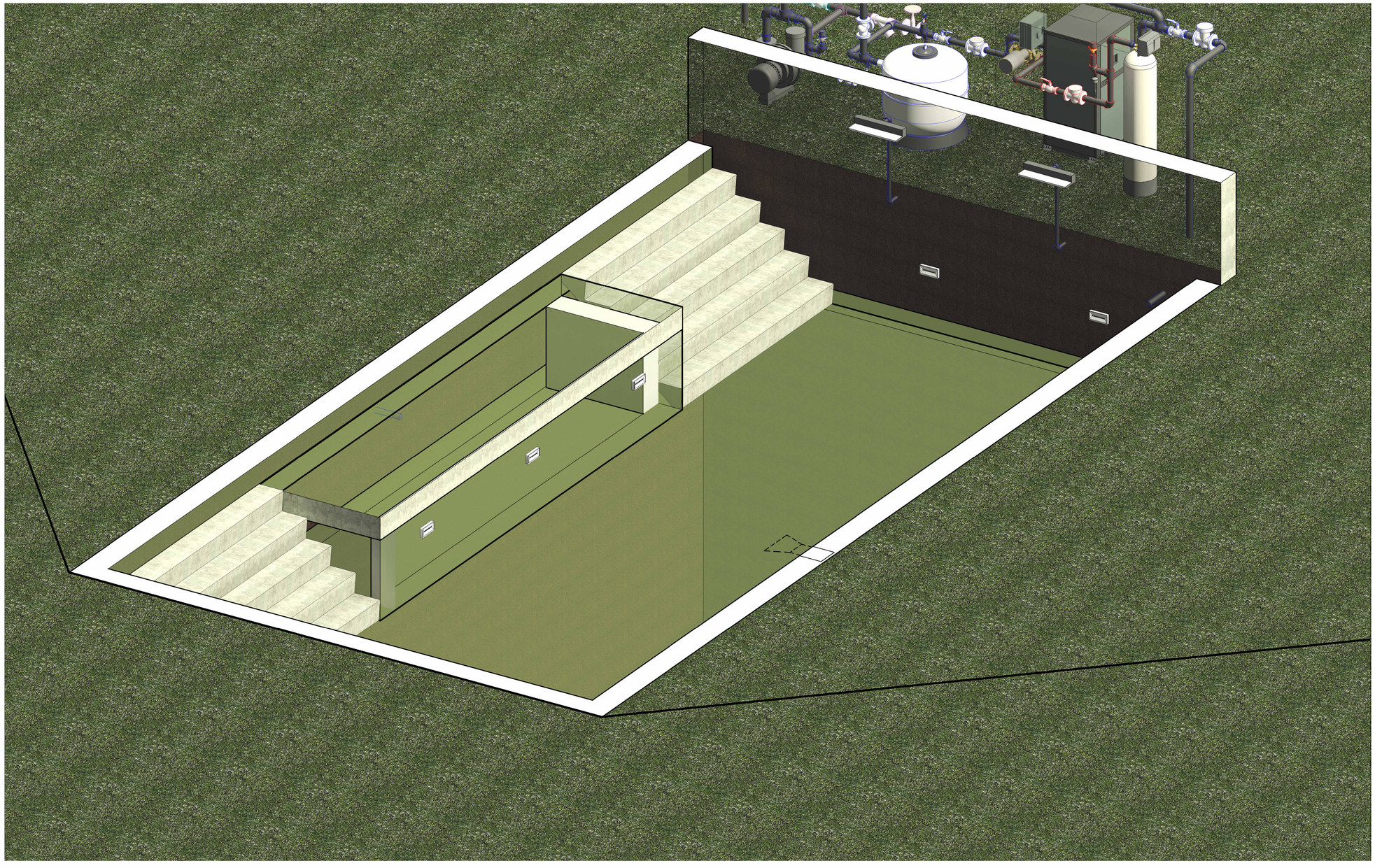

1 {3D}
Scale:

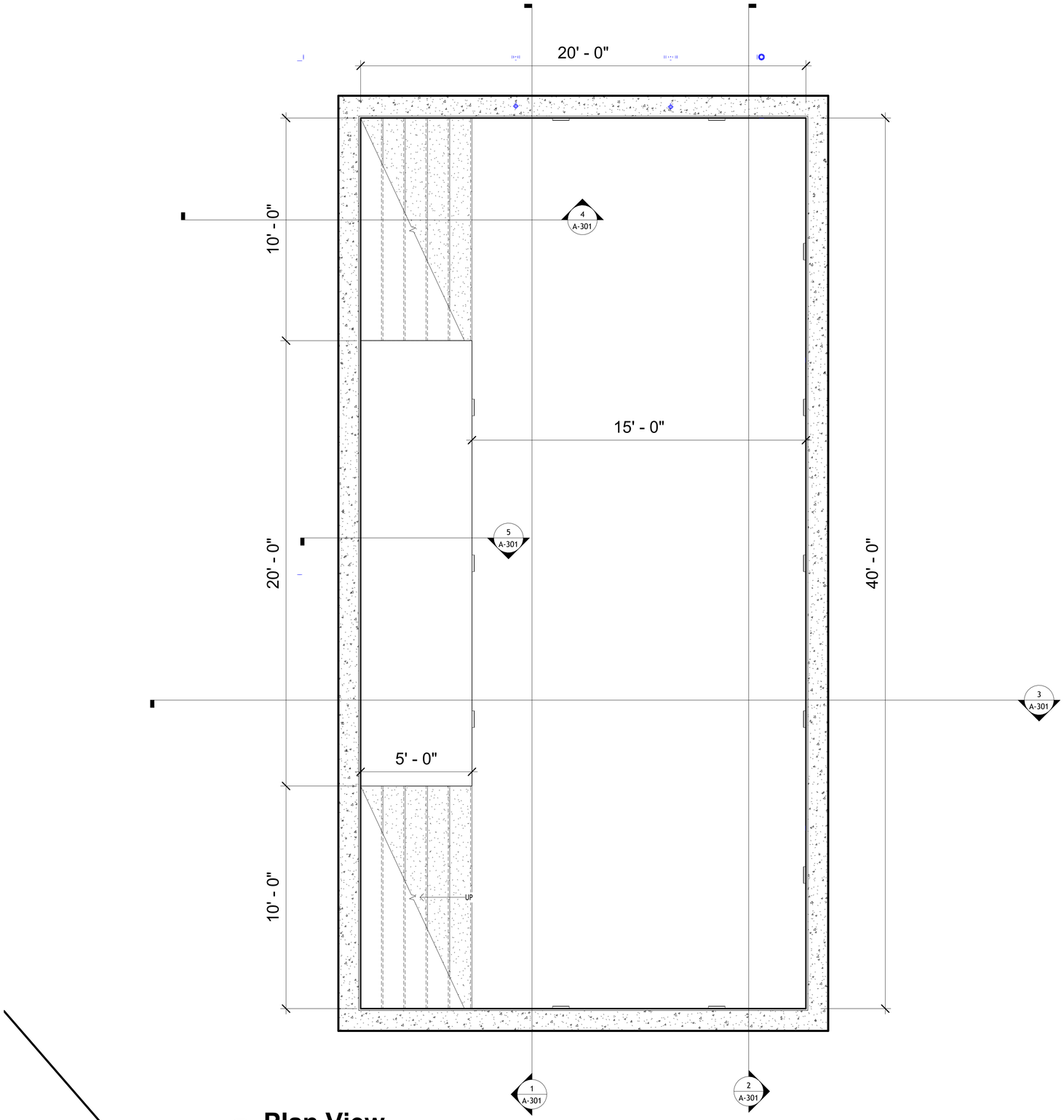

1 Plan View

Scale: 3/8" = 1'-0"

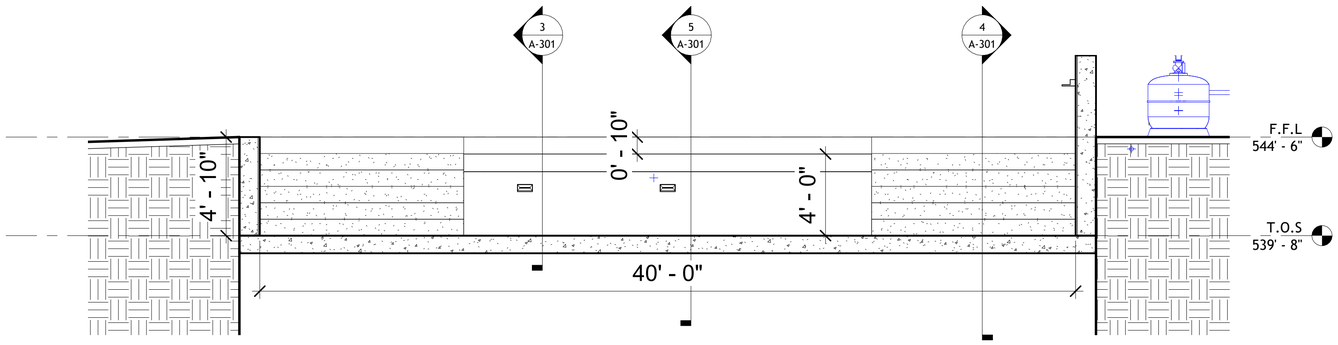

1 S1

Scale: 1/4" = 1'-0"

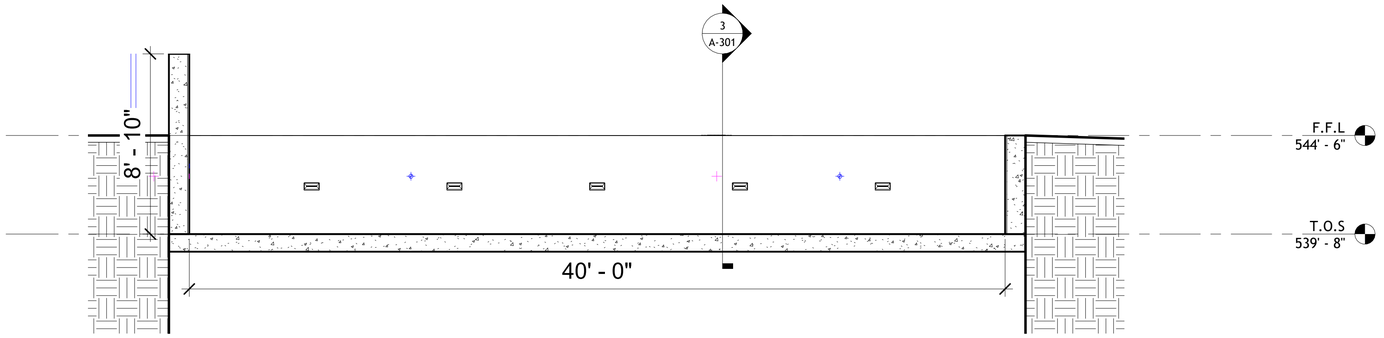

2 S2

Scale: 1/4" = 1'-0"

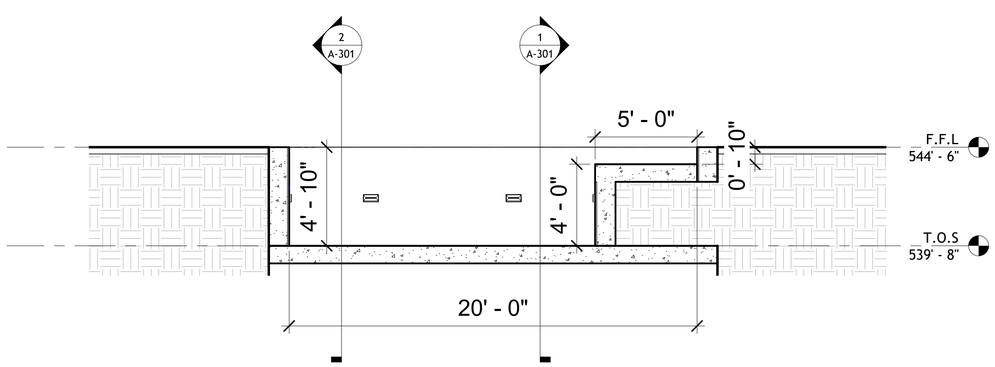

3 S3

Scale: 1/4" = 1'-0"

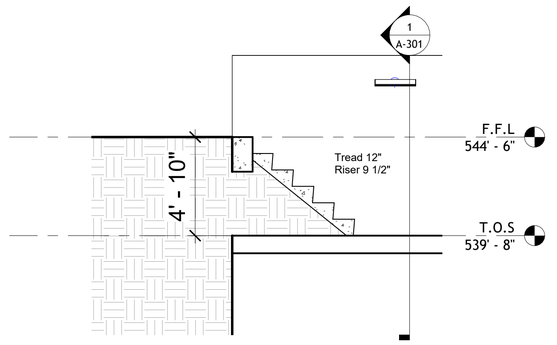

4 S4

Scale: 1/4" = 1'-0"

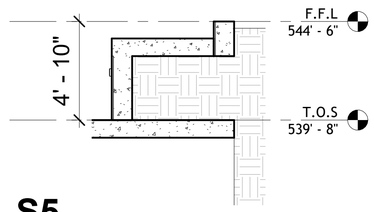

5 S5

Scale: 1/4" = 1'-0"

Turnover and required recirculation flow (per NJ code)										Filteration area as per th...				Pump and Pipe Sizing						Water Heater	
POOL DIMENSIONS	Length	Width	Depth	Area	Volumn	US Gallons	Trunover Time (hr)	Q (Req. Flow) gph	Q gpm	Type of Filter	filtration rate of filter gpm/ft2	Effective filteration area ft2...	Backwash capacity gpm	Flow GPM	TDH	Pump HP	Pump Efficiency 0.6	Motor HP	Pipe Size at 6-8ft/s	Type	BTU/hr
	40	20	4.1	800	3280	24551	6	4091.8	68.2	Standard...	10	7	70	70-75	30	0.6	1	1	DN 65 / 2.5"	Gas	156000

Tag	Manufacturer / Model	Equipment...	Rated Capacity / Performance	Connection Size	Power / Fuel	Remarks
P-1	Pentair WhisperFloXF (Commercial Pool Pump)	Circulation Pump	Designed for commercial pools; variable speed; capable of flows up to many 100s gpm. (pentair.com)	2½″–3″ unions typical	e.g., 3 HP, 3-Phase	Select curve for ~70 gpm @ actual TDH
F-1	Pentair Triton C Series (Commercial Sand Filter)	Sand Filter	Flow rates ~98-141 gpm in selected size. (pentair.com)	2″ or 3″ plumbing	-	Choose size based on ~5 ft² filter area for ~70 gpm
H-1	Rheem/“156” Series Gas Pool Heater (150,000 BTU/hr)	Heater	150,000 BTU/hr input for outdoor pool use. (rheem.com)	2″ water connections	Natural Gas or Propane	Oversized for margin; modulate or stage if needed
CL-1	Pentair Rainbow High-Capacity Chlorinator	Automatic Chlorination Feeder	For pools up to ~658,500 gallons. (poolzoom.com)	1″ PVC inlet/outlet (inline)	-	Install downstream of heater; include check valve

GENERAL NOTES — POOL PLUMBING & HEATING SYSTEM

1. Codes and Standards

All work shall comply with the following codes and standards:

2024 International Plumbing Code (IPC)

APSP/ICC PHTA-1: Standard for Public and Residential Swimming Pools

ANSI/APSP-15: Circulation Systems Standard

NSF 50: Circulation System Components for Pools and Spas

NEC Article 680: Swimming Pools, Fountains, and Similar Installations

New Jersey Uniform Construction Code (UCC) and all applicable local amendments.

All equipment shall bear NSF 50 and UL certification labels.

2. General Installation Requirements

Contractor shall verify all dimensions, levels, and connections before installation.

All pool equipment shall be installed on a reinforced concrete equipment pad (minimum 4 in thick), sloped for drainage, and raised above surrounding grade.

Provide adequate working space and access around all equipment per manufacturer’s instructions and NEC 110.26.

All connections shall be made with union-type fittings for easy serviceability.

All buried piping shall have minimum 18 in cover and be clearly identified by function.

System shall be pressure-tested at 1.5 times the working pressure for 2 hours before backfilling.

3. Circulation System

Water circulation path shall be:
Main Drain / Skimmer → Circulation Pump → Sand Filter → Heater → Check Valve → Chlorinator → Return Inlets.

Provide dual suction outlets or trench drain system per APSP-7 to prevent entrapment hazards.

Maintain required 6-hour turnover rate (design flow ≈ 70 GPM).

Use Schedule 40 PVC (buried) and Schedule 80 PVC (above grade) with solvent-welded joints.

Limit pipe velocity to 6 ft/s on suction and 8 ft/s on discharge lines.

4. Valves and Appurtenances

Provide ball valves or butterfly valves at suction and discharge of each major equipment item.

Install check valve and bypass loop between heater and chlorinator.

Provide drain valves at all low points and union connections for seasonal winterization.

All valves shall be labeled with permanent tags indicating function and flow direction.

5. Filter Installation

Filter shall be NSF 50–listed high-rate sand type with a maximum filtration rate of 15 GPM/ft².

Provide pressure gauge on filter inlet and outlet to monitor differential pressure.

Include sight glass and multiport backwash valve as per manufacturer’s requirements.

Backwash discharge shall terminate through an air-gap fitting to an approved waste receptor per IPC §608.13.1.

6. Pump Installation

Pump shall be centrifugal type, self-priming, NSF 50 listed, and capable of design flow at 30 ft TDH.

Provide valves and unions on suction and discharge for service.

Install pump on anti-vibration pad with straight pipe runs (≥10× suction diameter) before suction.

All electrical connections shall be GFCI protected and bonded per NEC 680.26.

5. Filter Installation

Filter shall be NSF 50–listed high-rate sand type with a maximum filtration rate of 15 GPM/ft².

Provide pressure gauge on filter inlet and outlet to monitor differential pressure.

Include sight glass and multiport backwash valve as per manufacturer’s requirements.

Backwash discharge shall terminate through an air-gap fitting to an approved waste receptor per IPC §608.13.1.

6. Pump Installation

Pump shall be centrifugal type, self-priming, NSF 50 listed, and capable of design flow at 30 ft TDH.

Provide valves and unions on suction and discharge for service.

Install pump on anti-vibration pad with straight pipe runs (≥10× suction diameter) before suction.

All electrical connections shall be GFCI protected and bonded per NEC 680.26.

7. Heater Installation

Heater shall be gas-fired or heat-pump type, UL-listed, with pressure relief valve and unions.

Maintain minimum 12 in straight pipe before and after heater connections.

Maintain clearances and ventilation as per manufacturer.

Provide thermometer and pressure relief valve on outlet side.

Install check valve downstream of heater to prevent corrosive backflow from chlorinator.

8. Chlorinator Installation

Chlorinator shall be installed on heater discharge line with check valve.

Use corrosion-resistant piping materials downstream of chlorinator.

Follow manufacturer’s safety instructions for loading, sealing, and venting.

9. Make-Up Water and Backflow Protection

Provide make-up water connection with:

Reduced Pressure Zone Backflow Preventer (ASSE 1013)

Pressure-reducing valve

Manual isolation valve

Install in accordance with IPC §608.14.2.

Backwash or waste discharge shall be air-gapped to an approved receptor per IPC § 608.13.

10. Electrical and Bonding

All electrical equipment shall comply with NEC 680 requirements.

All metallic parts within 5 ft of pool water shall be bonded with #8 AWG solid copper conductor.

All equipment shall have a dedicated grounding conductor.

All circuits serving pool equipment shall be GFCI protected.

11. Testing and Commissioning

Hydrostatic test all buried piping to 1.5× design pressure for 2 hours.

Verify filter pressure differential, heater performance, and flow rate at full operation.

Contractor shall demonstrate system operation and maintenance to Owner.

Provide complete Operation & Maintenance Manuals for all installed equipment.

12. Winterization and Seasonal Operation

Drain and blow out all suction and return lines below frost depth prior to winter.

Remove and store filter drain plug, pump basket, and chlorinator lid per manufacturer’s instructions.

Cap or plug all open lines and protect equipment from freezing.

13. Labeling and Documentation

Label all equipment, valves, and piping with permanent engraved tags.

Provide updated as-built piping layout showing pipe sizes, valve locations, and equipment tags.

Submit test certificates, warranty information, and manufacturer data sheets upon project completion.

TYPICAL POOL PLUMBING & HEATING NOTES

1. All design, materials, and installation shall conform to IPC 2024, PHTA-1 (Standard for Public and Residential Pools), NSF 50, and NEC Article 680.

2. Equipment and components shall be NSF 50-listed and UL-rated for swimming pool service.

3. Circulation system shall provide a 6-hour maximum turnover for the 24,500-gallon pool (≈ 70 GPM design flow).

4. Typical flow sequence: Main drains / skimmers → Pump (P-1) → Sand Filter (F-1) → Heater (H-1) → Check Valve → Chlorinator (CL-1) → Return inlets.

5. Provide 2 ½ in PVC Schedule 40 suction and return headers; maintain velocity ≤ 6 ft/s.

6. All buried PVC piping shall have 18 in minimum cover and be pressure-rated 150 psi.

7. Piping shall be hydrostatically tested to 1.5 × working pressure for 2 hours before backfilling.

8. Install union-type isolation ball valves on suction and discharge of each major equipment item.

9. Provide pressure gauges on filter inlet and outlet to determine differential pressure and backwash need.

10. Install flow meter on heater outlet prior to chlorinator for verifying turnover rate.

11. Heater shall be gas-fired or electric heat-pump type, UL-listed, with pressure relief valve, unions, and 12 in minimum straight pipe at inlet and outlet.

12. Maintain minimum 3 ft clearance around heater for service and adequate combustion air as per manufacturer.

13. Provide check valve and bypass loop between heater and chlorinator to prevent chemical backflow into heater.

14. Chlorinator shall be installed on heater discharge side and fitted with corrosion-resistant check valve per APSP-15 §7.4.2.

15. Make-up water connection shall include reduced-pressure-zone (RPZ) backflow preventer (ASSE 1013), manual shut-off, and pressure-reducing valve per IPC §608.

16. Backwash line shall discharge through an air-gap fitting to an approved waste receptor with vacuum breaker per IPC §608.13.1.

17. Provide dual suction outlets or trench drain system separated by ≥ 3 ft and rated per APSP-7 entrapment protection standard.

18. Return header shall serve minimum four wall inlets spaced evenly to maintain uniform circulation.

19. Provide drain valves at low points for winterization and unions on both sides of all equipment.

20. Equipment pad shall be reinforced concrete, min 4 in thick, sloped to drain, and elevated above grade.

21. Provide bonding of all metallic components within 5 ft of pool with No. 8 AWG copper conductor per NEC 680.26.

22. All electrical circuits serving pool equipment shall be GFCI-protected and installed per NEC 680.

23. Provide temperature sensor and thermometer at heater outlet for monitoring.

24. Maintain clear labeling of all valves, piping, and equipment tags (P-1, F-1, H-1, CL-1 etc.).

25. All installations shall allow for easy serviceability and comply with manufacturer’s minimum clearance requirements.

26. Provide operating and maintenance manuals and demonstrate system startup to Owner upon completion.

27. Contractor shall verify local authority requirements for backwash disposal, gas venting, and electrical permits prior to installation.

28. Entire system shall be tested for leakage and performance prior to acceptance.

ABBREVIATIONS	
NAME	DESCRIPTION
BV	BALL VALVE
RV	RETURN VALVE
IV	ISOLATION VALVE
ST	STRAINER
TS	TEMPERATURE SWITCH
FM	FLOW METER
PG	PRESSURE GUAGE
BWL	BACKWASH LINE
MWL	MAKEUP WATER LINE

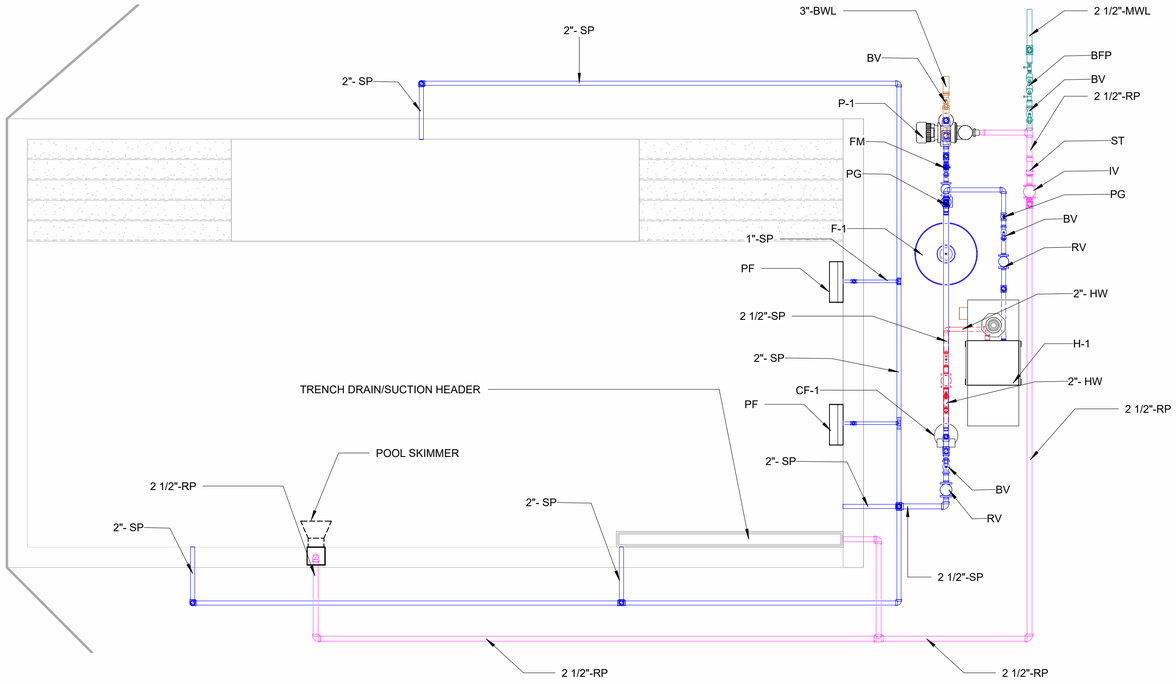

1 F.F.L PLUMBING PLAN

Scale: 1/4" = 1'-0"

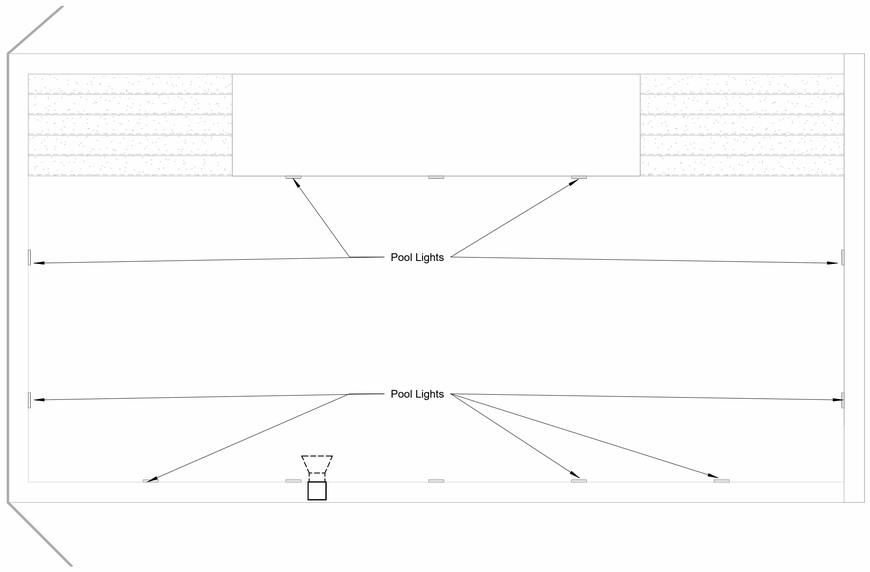

2 F.F.L LIGHTING PLAN

Scale: 1/4" = 1'-0"

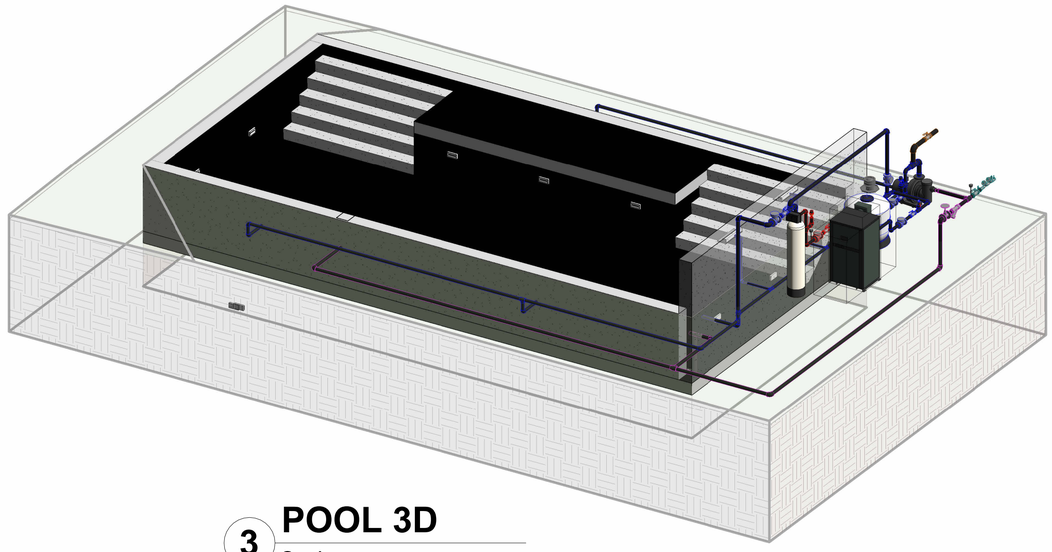

3 POOL 3D

Scale:

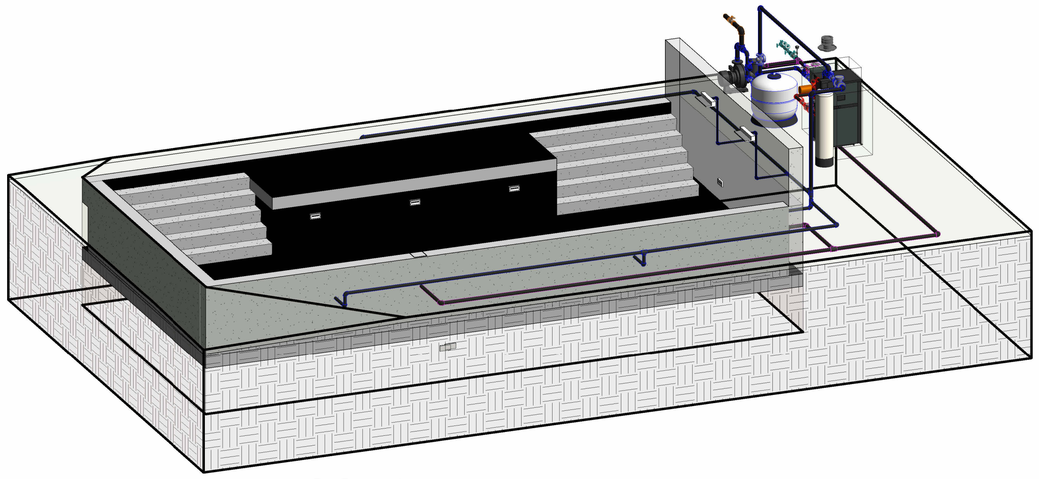

4 POOL 3D

Scale: